Technical Evaluation Report™

TER 1808-06

Strong-R® Structural Insulation – Canada – Limit States Design

OX Engineered Products, LLC

Product:
Strong-R Structural Insulation

Issue Date:
March 5, 2019

Revision Date:
March 22, 2024

Subject to Renewal:
April 1, 2025

Use the QR code to access the most recent version or a sealed copy of this Technical Evaluation Report (TER) at drjcertification.org.

COMPANY INFORMATION:	ADDITIONAL LISTEES:
OX Engineered Products, LLC 22260 Haggerty Rd Ste 365 Northville, MI 48167-8970 P: 989-798-5923 www.oxengineeredproducts.com	1255 N 5th St Charleston, IL 61920 P: 269-435-2425

DIVISION: 06 00 00 - WOOD, PLASTICS AND COMPOSITES	DIVISION: 07 00 00 - THERMAL AND MOISTURE PROTECTION
SECTION: 06 12 00 - Structural Panels	SECTION: 07 21 00 - Thermal Insulation
SECTION: 06 12 19 - Shear Wall Panels	SECTION: 07 25 00 - Water-Resistive Barriers/Weather Barriers
SECTION: 06 16 00 - Sheathing	SECTION: 07 27 00 - Air Barriers

1 Innovative Product Evaluated[1]

1.1 Strong-R Structural Insulation

2 Applicable Codes and Standards[2]

2.1 *Codes*

2.1.1 *NBC—10, 15, 20: National Building Code of Canada*

2.1.2 *NECB—17, 20: National Energy Code of Canada for Buildings*

2.1.3 *O Reg. 332/12: Ontario Building Code (OBC)*[3]

2.2 *Standards and Referenced Documents*

2.2.1 *ASTM C518: Standard Test Method for Steady-State Thermal Transmission Properties by Means of the Heat Flow Meter Apparatus*

2.2.2 *ASTM E330: Standard Test Method for Structural Performance of Exterior Windows, Doors, Skylights, and Curtain Walls by Uniform Static Air Pressure Difference*

2.2.3 *ASTM E331: Standard Test Method for Water Penetration of Exterior Windows, Skylights, Doors, and Curtain Walls by Uniform Static Air Pressure Difference*

2.2.4 *ASTM E564: Standard Practice for Static Load Test for Shear Resistance of Framed Walls for Buildings*

2.2.5 *ASTM E2126: Standard Test Methods for Cyclic (Reversed) Load Test for Shear Resistance of Vertical Elements of the Lateral Force Resisting Systems for Buildings*

2.2.6 *ASTM E2178: Standard Test Method for Air Permeance of Building Materials*

2.2.7 *CWC: Engineering Guide for Wood Frame Construction*

2.2.8 *CSA O86: Engineering Design in Wood*

2.2.9 *CAN/ULC-S102: Standard Method of Test for Surface Burning Characteristics of building Materials and Assemblies*

2.2.10 *CAN/CSA S136: North American Specification of Cold-Formed Steel Structural Members*

---

1 For more information, visit drjcertification.org or call us at 608-310-6748.

2 Unless otherwise noted, all references in this report are from the 2020 version of the NBC. This alternative solution is also approved for use with the 2010 and 2015 NBC and the standards referenced therein.

3 References in this report to the National Building Code of Canada (NBC) apply to the Ontario Building Code (OBC), unless noted otherwise.

Confidential Intellectual Property is protected by Defend Trade Secrets Act 2016,
© 2024 DrJ Engineering, LLC

3 Performance Evaluation

3.1 Testing and related engineering evaluations are defined as intellectual property and/or trade secrets.[4]

3.2 Strong-R Structural Insulation was evaluated to determine:

3.2.1 Structural performance under lateral load conditions, wind and seismic, in accordance with NBC Division B Subsection 4.1.8.

3.2.2 Structural performance under lateral load conditions for both wind and seismic loading in accordance with NBC Division B Part 4 Structural Loads and Procedures, and the CWC Engineering Guide for Wood Frame Construction.

3.2.2.1 **Table 2** and **Table 5** provide Seismic Design Coefficients (SDC) that conform to the requirements in NBC Division B Subsection 4.1.8 for design of wall assemblies in buildings that require seismic design in accordance with NBC (i.e., all seismic design categories).

3.2.2.2 The basis for equivalency testing is outlined in Sentence 4.1.8.9.(5) of NBC, Division B:

> If it can be demonstrated through testing, research and analysis that the seismic performance of a structural system is at least equivalent to one of the types of SFRS mentioned in Table 4.1.8.9., then such structural system will qualify for values of Rd and Ro corresponding to the equivalent type in that Table. [See Note A-4.1.8.9(5)].

3.2.3 Resistance to transverse loads for wall assemblies used in light-frame wood and steel construction in accordance with NBC Division B Subsection 4.1.7.

3.2.4 Performance for use as foam plastic insulation in accordance with NBC Division B Article 3.1.5.15 and NECC Division B Article 3.2.1.2.

3.2.5 Performance for use as part of an air barrier assembly in accordance with NBC Division B Section 5.4 and Subsection 9.25.3, and NECC Division B Subsection 3.2.4.3.

3.2.6 Performance for use as a Water-Resistive Barrier (WRB) in accordance with NBC Division B Note A-5.6.2.1.

3.3 Uplift performance is out of scope of this report.

3.4 Engineering evaluations are conducted within DrJ's ANAB accredited ICS code scope, which are also its areas of professional engineering competence.[5]

3.5 Any regulation specific issues not addressed in this section are outside the scope of this report.

3.6 Any engineering evaluation conducted for this report was performed on the dates provided in this report and within DrJ's professional scope of work.

---

[4] 18 U.S. Code § 1831 - Economic espionage - Whoever, intending or knowing that the offense will benefit any foreign government, foreign instrumentality, or foreign agent, knowingly steals, or without authorization appropriates, takes, carries away, or conceals, or by fraud, artifice, or deception obtains a trade secret shall be fined not more than $5,000,000 or imprisoned not more than 15 years, or both. Any organization that commits any offense described shall be fined not more than the greater of $10,000,000 or 3 times the value of the stolen trade secret to the organization, including expenses for research and design and other costs of reproducing the trade secret that the organization has thereby avoided. https://www.law.cornell.edu/uscode/text/18/part-I/chapter-90.

[5] ANAB is part of the USMCA and IAF MLA, where the purpose of these agreements are to ensure mutual recognition of accredited certification and validation/verification statements between agreement signatories, and subsequent acceptance of ANAB accredited certification and validation/verification statements by professional engineers based upon having one universal approval process for the timely approval of innovative materials, products, designs, services, assemblies and/or methods of construction.

Confidential Intellectual Property is protected by Defend Trade Secrets Act 2016,
© 2024 DrJ Engineering, LLC

4 Product Description and Materials

4.1 The innovative product evaluated in this report is shown in **Figure 1**.

Figure 1. Strong-R® Structural Insulation

4.2 Strong-R Structural Insulation is a structural, rigid insulation sheathing product consisting of a proprietary fibrous sheathing board laminated to one side of a proprietary rigid foam plastic insulation.

4.2.1 The proprietary fibrous sheathing is made of specially treated plies that are pressure-laminated with a water-resistant adhesive. The surface finish consists of a facer on one or both side using a 2.9 mm (0.113") nominal thickness fibrous sheathing board.

4.2.2 The rigid foam plastic insulation is a Class A proprietary polyisocyanurate, which can have facings on one or both sides. The facers are designed with a base foil layer (0.0009 mil).

4.3 *Material Availability*

4.3.1 *Thickness:*

4.3.1.1 Up to 54 mm (2 1/8")

4.3.2 *Standard Product Width:*

4.3.2.1 1219 mm (48")

4.3.3 *Standard Lengths:*

4.3.3.1 2438 mm (96")

4.3.3.2 2743 mm (108")

4.3.3.3 3048 mm (120")

5 Applications

5.1 *General*

5.1.1 Strong-R Structural Insulation is used in the following applications:

5.1.1.1 Wall sheathing in buildings constructed in accordance with the NBC for light-frame wood and steel construction.

5.1.1.2 Structural wall sheathing to provide lateral load resistance (wind and seismic) for braced wall panels used in light-frame wood and steel construction.

5.1.1.3 Structural wall sheathing to provide resistance to transverse loads for wall assemblies used in light-frame steel construction.

5.1.1.4 Insulating sheathing applied as in-fill to portions of walls that are not designed as braced wall panels or shear walls.

5.1.1.5 Insulated sheathing in accordance with the NBC Division B Article 3.1.5.15, and NECC Division B Article 3.2.1.2.

Confidential Intellectual Property is protected by Defend Trade Secrets Act 2016,
© 2024 DrJ Engineering, LLC

5.1.1.6 An approved WRB in accordance with NBC Division B Article 5.6.2.1, when installed with approved Construction Tape on all sheathing seams, see Section **5.3.3**. See the manufacturer product information for further details.

5.1.1.6.1 Where the joints are not taped, a separate WRB shall be installed in accordance with the WRB manufacturer installation instructions.

5.1.1.7 An air barrier material as part of an air barrier assembly in accordance with NBC Division B Section 5.4 and NECC Division B Subsection 3.2.4, in accordance with the manufacturer installation instructions and this TER.

5.1.2 Strong-R Structural Insulation contains foam plastics complying with NBC Division B, Article 3.1.5.15.

5.2 *Structural Applications*

5.2.1 *General Provisions*

5.2.1.1 Except as otherwise described in this report, Strong-R Structural Insulation shall be installed in accordance with the applicable building codes listed in Section **2** using the provisions set forth herein for light-frame wood and steel construction.

5.2.1.2 Anchorage for in-plane shear shall be designed to transfer the induced shear force into and out of each shear wall. In no case shall the anchorage spacing exceed the following limits:

5.2.1.2.1 For wind design, anchor bolt spacing shall not exceed 1.8 m (6') o.c.

5.2.1.2.2 For seismic design, anchor bolt spacing shall not exceed 1.2 m (4') o.c.

5.2.1.3 The maximum aspect ratio for Strong-R Structural Insulation shall be 4:1.

5.2.1.4 The minimum full height panel width shall be 610 mm (24").

5.2.1.5 All panel edges shall be supported by framing.

5.2.1.6 Fasteners may be countersunk beneath the outer surface of the foam plastic sheathing layer.

5.2.2 *Steel-Framed Construction*

5.2.2.1 Strong-R Structural Insulation panels used in wall assemblies designed as shear walls:

5.2.2.1.1 Are permitted to be designed in accordance with the methodology used in CAN/CSA S136 for cold formed steel using the capacities shown in **Table 1** and **Table 2**.

5.2.2.1.2 Resist lateral wind load forces using the factored shear resistance set forth in **Table 1**.

5.2.2.1.3 Resist seismic loads using the factored shear resistance set forth in **Table 2** when seismic design is required in accordance with NBC Division B Subsection 4.1.8.

5.2.2.1.4 The ductility response modification factor and, R_d, over strength-related force modification factor, R_o, indicated in **Table 2** shall be used to determine the base shear, element design forces, and design story drift in accordance with NBC Division B Subsection 4.1.8.

5.2.2.2 Strong-R Structural Insulation panels are permitted to resist transverse wind load forces using the specified transverse loads set forth in **Table 3**. Required component and cladding loads to be resisted are found in NBC Division B Subsection 4.1.7 (see Sentence 4.1.7.1[5]).

Confidential Intellectual Property is protected by Defend Trade Secrets Act 2016,
© 2024 DrJ Engineering, LLC

Table 1. Factored Shear Resistance for Limit States Design for Strong-R Structural Insulation with Cold Formed Steel Stud Framing for Lateral Wind Loads

Structural Sheathing Product	Thickness mm (in)	Fastener Spacing (edge/field) mm (in)	Maximum Stud Spacing mm (in)	Gypsum Wallboard (GWB) mm (in)	Gypsum Wallboard Fastener Spacing[3] (edge/field) mm (in)	Factored Shear Resistance kN/m (plf)	Fastener Schedule
Strong-R Structural Insulation Light-Frame Cold Formed Steel[1]	32 (1 1/4)	76/76 (3/3)	610 (24) o.c.	12.7 (1/2) GWB	203/203 (8/8)	6.5 (450)	See Table Note 4
					203/305 (8/12)	6.8 (465)	
					152/305 (6/12)	7.6 (520)	
		76/76 (3/3)	610 (24) o.c.	No GWB[2]	-	5.5 (375)	
						3.3 (225)	See Table Note 8
						9.2 (630)	See Table Note 6
		76/305 (3/12)				9.2 (630)	
		152/305 (6/12)				4.6 (310)	
		305/305 (12/12)				2.5 (170)	See Table Note 5
	54 (2 1/8)	76/76 (3/3)	610 (24) o.c.	No GWB[2]	-	9.2 (630)	See Table Note 6
		76/305 (3/12)				9.2 (630)	
		152/305 (6/12)				4.6 (310)	
		305/305 (12/12)				2.5 (170)	See Table Note 5
		76/76 (3/3)				6.1 (415)	See Table Note 7

SI: 25.4 mm = 1 in, 1 kN/m = 737.6 lb/ft

1. 20-gauge, 345 MPa (50 ksi) 92 mm (3 5/8") metal studs @ 610 mm (24") o.c.
2. Mid-height horizontal brace installed every other cavity space.
3. Gypsum attached with minimum #6 type S screws (32 mm) 1 1/4" long with a minimum edge distance of 9.5 mm (3/8").
4. #8 x 1 5/8" (41 mm) Self-Drilling Modified Truss Head Screw (Head flush w/ exterior of foam board).
5. #8 x 1 5/8" (41 mm) Self-Drilling Modified Truss Head Screw (Head driven through foam plastic to seat against the backer material).
6. #8 x 2 1/2" (64 mm) Self-Drilling Modified Truss Head Screw (Head driven through foam plastic to seat against the backer material).
7. #8 x 3" (76 mm) Self-Drilling Modified Truss Head Screw (Head flush w/ exterior of foam board).
8. 2.5 mm (0.100") Diameter x 38 mm (1 1/2") Length Pins (Bostitch® C4S100 BG).

Confidential Intellectual Property is protected by Defend Trade Secrets Act 2016,
© 2024 DrJ Engineering, LLC

Table 2. Seismic Performance of Strong-R Structural Insulation with Cold Formed Steel Stud Framing[1,2,5,8]

Seismic Force Resisting System (SFRS)	Thickness mm (in)	Gypsum Wallboard Fastening Schedule[4,10] mm (in)	Maximum Stud Spacing mm (in)	Factored Shear Resistance kN/m (plf)	Ductility Factor,[6,7] R_d	Overstrength Force Modification Factor,[7] R_o	Structural System Limitations and Building Height Limit[9] m (ft)			
							SC1	SC2	SC3	SC4
Light-Frame Cold Formed Steel Walls Sheathed with Strong-R Structural Insulation	32 (1 1/4)	No GWB[3]	610 (24) o.c.	5.5 (375)	2.5	1.7	20 (65.6)	20 (65.6)	20 (65.6)	20 (65.6)
		203:203 (8:8)		6.5 (450)	1.5	1.7	20 (65.6)	20 (65.6)	20 (65.6)	20 (65.6)

SI: 25.4 mm = 1 in, 1 kN/m = 737.6 lb/ft

1. Strong-R Structural Insulation attached with a minimum #8 x 1 5/8" Self Drilling Modified Truss Head Screw. Fasteners spaced a maximum of 76 mm (3") o.c. at the panel edges and 76 mm (3") o.c. in the field. Fastener edge distance shall be a minimum of 9.5 mm (3/8"). Fastener head shall be in contact with the panel surface. Alternately, fastener heads are permitted to be overdriven into foam portion of the panel with no reduction in shear capacities.
2. 20-gauge, 345 MPa (50 ksi) 92 mm (3 5/8") metal studs @ 610 mm (24") o.c.
3. Mid height horizontal brace installed every other cavity space.
4. Walls installed with minimum 12.7 mm (1/2") Gypsum wallboard attached with minimum #6 type S screws 32 mm (1 1/4") long. Fasteners shall maintain a minimum edge distance of 9.5 mm (3/8").
5. All seismic design parameters follow the equivalency as defined in Section **3** of this report.
6. Response modification coefficient, R_d, for use throughout NBC.
7. For combinations of different types of SFRS acting in the same direction in the same story, R_dR_o shall be taken as the lowest value of R_dR_o corresponding to these systems. See NBC Division B, Article 4.1.8.9.
8. Work this table with additional system restrictions as defined in NBC, Division B, Article 4.1.8.10.
9. Heights are maximum height limits above grade, as defined in NBC Division B Table 4.1.8.9.
10. NBC Table 9.23.13.6 requires 15.9 mm (5/8") thick gypsum with framing 610 mm (24") o.c.

Table 3. Transverse (Out-of-Plane) Load Performance of Strong-R Structural Insulation[1]

Structural Sheathing Product	Maximum Stud Spacing mm (in)	Hourly 1-in-50 Wind Pressure[2] kPa
Strong-R Structural Insulation	610 (24) o.c.	1.8

SI: 25.4 mm = 1 in, 1 kN/m^2 = 20.9 psf, 1 MPa = 145 psi

1. #8 x 2 1/2" Zinc Coated Self-Drilling Modified Truss Head Screw, 152 mm (6") o.c. in perimeter and 305 mm (12") o.c. in field.
2. Hourly Wind Pressure (1-in-50) for selected locations can be located in NBC Division B, Appendix C, Table C-2.

5.2.3 *Performance-Based Wood-Framed Construction*

5.2.3.1 Strong-R Structural Insulation panels used in wall assemblies designed as shear walls are permitted to be designed in accordance with the methodology used in CAN/CSA-O86 for WSP:

5.2.3.1.1 Using the capacities shown in **Table 4** for wind load forces.

5.2.3.1.2 To resist seismic load forces using the seismic specified shear strengths set forth in **Table 5** when seismic design is required in accordance with NBC Division B Subsection 4.1.8.

5.2.3.1.2.1 The ductility response modification factor, R_d, and overstrength force modification factor, R_o, indicated in **Table 5** shall be used to determine the base shear, element design forces, and design story drift in accordance with NBC Division B Subsection 4.1.8.

Confidential Intellectual Property is protected by Defend Trade Secrets Act 2016,
© 2024 DrJ Engineering, LLC

Table 4. Specified Shear Capacity for Limit States Design for Strong-R Structural Insulation with Wood Stud Framing – Wind

Structural Sheathing Product	Thickness mm (in)	Fastener Spacing[1] [edge/field] mm (in)	Maximum Stud Spacing mm (in)	Gypsum Wallboard (GWB)	Specified Shear Strength kN/m (plf)
Strong-R Structural Insulation	32 (1 1/4)	76/305 (3/12)	610 (24)	No GWB	10.1 (690)
		152/305 (6/12)			5.0 (345)
	54 (2 1/8)	76/305 (3/12)	610 (24)	No GWB	10.1 (690)
		152/305 (6/12)			5.0 (345)

SI: 25.4 mm = 1 in, 1 kN/m = 737.6 lb/ft

1. Strong-R Structural Insulation attached with a minimum #8 x 1 1/4" (32 mm) wafer head. Fastener edge distance shall be a minimum of 9 mm (0.35"). Fastener head shall be in contact with the panel surface. Alternately, fastener heads are permitted to be overdriven into foam portion of the panel with no reduction in shear capacities.

Table 5. Specified Shear Capacity for Limit States Design for Strong-R Structural Insulation with Wood Stud Framing – Seismic[1,2,5]

Seismic Force Resisting System (SFRS)	Thickness mm (in)	Gypsum Wallboard Fastening Schedule mm (in)	Maximum Stud Spacing mm (in)	Specified Shear Strength kN//m (plf)	Ductility Factor,[3,4] R_d	Overstrength Force Modification Factor,[4] R_o	Structural System Limitations and Building Height Limit[6,7] m (ft)			
							SC1	SC2	SC3	SC4
Strong-R Structural Insulation	32 (1 1/4)	No GWB	610 (24)	5.0 (345)	3.0	1.7	NL	NL	30	20

SI: 25.4 mm = 1 in, 1 kN/m = 737.6 lb/ft

1. Strong-R Structural Insulation attached with a minimum #8 x 11/4" (32 mm) wafer head screw and spaced a maximum of 152 mm (6") o.c. at the panel edges and 305 mm (12") o.c. in the field. Fastener edge distance shall be a minimum of 9 mm (0.35"). Fastener head shall be in contact with the panel surface. Alternately, fastener heads are permitted to be overdriven into foam portion of the panel with no reduction in shear capacities.
2. All seismic design parameters follow the equivalency as defined in Section 3 of this report.
3. Response modification coefficient, Rd, for use throughout NBC.
4. For combinations of different types of SFRS acting in the same direction in the same story, RdRo shall be taken as the lowest value of RdRo corresponding to these systems. See NBC Division B, Article 4.1.8.9.
5. Work this table with additional system restrictions as defined in NBC, Division B, Article 4.1.8.10.
6. Heights are maximum height limits above grade, as defined in NBC Division B Table 4.1.8.9.
7. NL = Not Limited

5.3 *Water-Resistive Barrier*

5.3.1 Strong-R Structural Insulation may be used as a WRB as prescribed in NBC Division B Note A-5.6.2.1 when installed on exterior walls as described in this section.

5.3.2 Strong-R Structural Insulation shall be installed with board joints placed directly over exterior framing spaced a maximum of 610 mm (24") o.c. The fasteners used to attach the board shall be installed in accordance with Section **6**.

5.3.3 A separate WRB may also be provided. If a separate WRB method is used, taping of the sheathing joints is not required.

5.3.4 Flashing of penetrations shall comply with the applicable code and must be installed at all sheathing penetrations. Use qualified flashing tape, such as Arctic Flash Synthetic Flashing, Flexible Butyl Flashing, or Home Guard RA-Plus Flashing. See **Figure 2**, **Figure 3** and **Figure 4** for typical penetration flashing details.

Confidential Intellectual Property is protected by Defend Trade Secrets Act 2016,
© 2024 DrJ Engineering, LLC

5.3.5 Flashing Details – Typical Flanged and Unflanged Penetration and Flanged Window

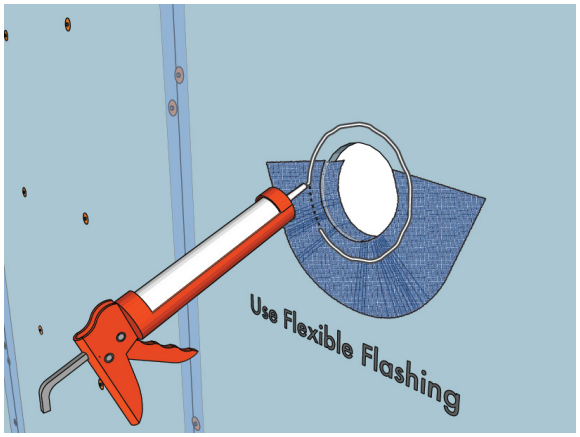

STEP 1

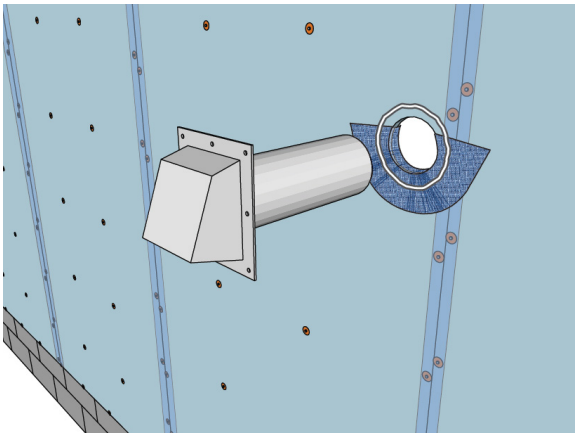

STEP 2

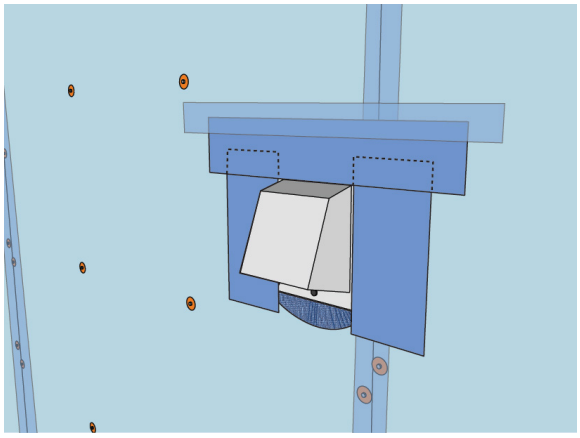

STEP 3

Figure 2. Typical Penetration Flashing Detail – Flanged

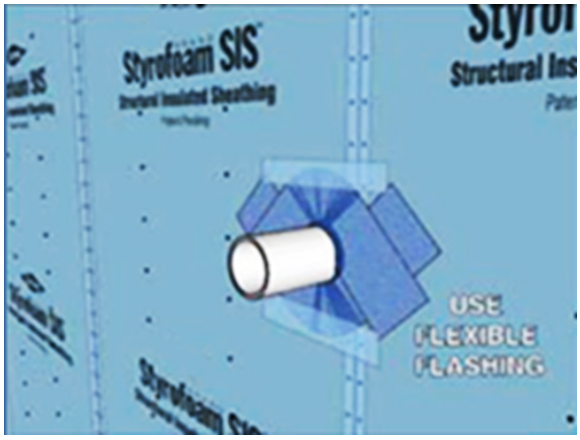

Figure 3. Typical Penetration Flashing Detail – Unflanged

Confidential Intellectual Property is protected by Defend Trade Secrets Act 2016,
© 2024 DrJ Engineering, LLC

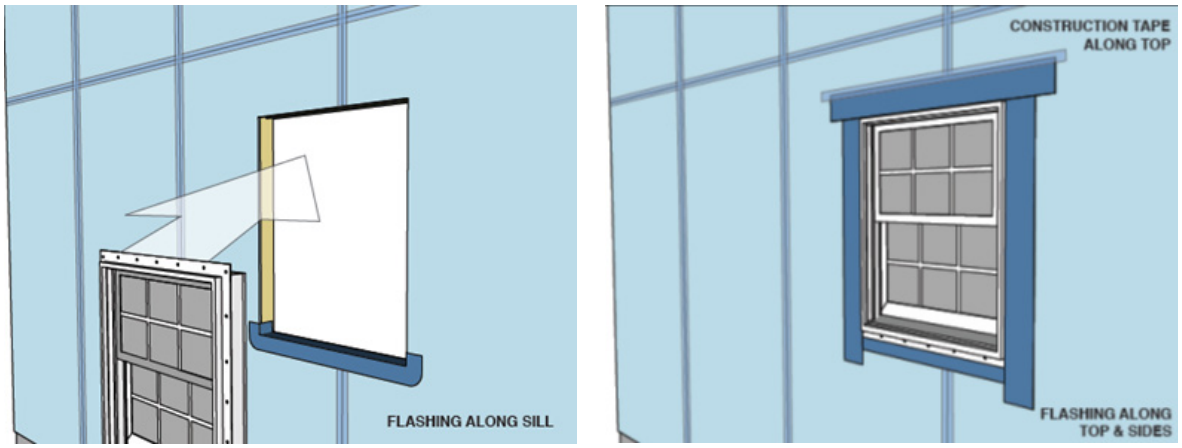

STEP 1 **STEP 2**

Figure 4. Typical Window Flashing Detail

5.4 *Thermal Resistance (RSI-Value)*

5.4.1 Strong-R Structural Insulation is a Foam Plastic Insulation Panel (FPIS) used as thermal insulation in wall, roof, and ceiling assemblies.

5.4.2 Strong-R Structural Insulation meets the continuous insulating sheathing requirements complying with the provisions of NECC Division B Article 3.1.1.5.

5.4.3 Strong-R Structural Insulation has the thermal resistance shown in **Table 6**.

Table 6. Strong-R Structural Insulation Thermal Resistance Properties

Thickness, mm (in)	RSI/R-Value, °K·m²/W (hr·ft²·°F/Btu)[1]
51 (2.0)	2.3 (13.0)
32 (1.25)	1.3 (7.5)

SI: 25.4 mm = 1 in

1. Thermal values are determined using the ASTM C518 test method at 23.9°C (75°F) mean temperature on material conditioned according to ASTM C1289 Section 11.1 (°F·ft²·hr/Btu).

5.5 *Air Barrier*

5.5.1 Strong-R Structural Insulation meets the requirements of NECC Division B Part 3.4.2.3 for use as an air barrier material as part of an air barrier assembly when installed in accordance with the manufacturer installation instructions and this report with all seams, including the top and bottom edges, taped.

5.5.2 All penetrations shall be flashed and sealed in accordance with the flashing manufacturer installation instructions. Self-adhered flashing tape shall meet AAMA 711 (FortiFlash® Butyl or equivalent).

5.5.3 Strong-R Structural Insulation is defined as an air barrier material having an air permeance of less than 0.02 L/(s·m²). For use as an air barrier material in accordance with NBC Division B, Sentence 5.4.1.2(2).

Confidential Intellectual Property is protected by Defend Trade Secrets Act 2016,
© 2024 DrJ Engineering, LLC

5.6 *Surface Burn Characteristics*

5.6.1 Strong-R Structural Insulation has the flame spread ratings as shown in **Table 7**, when tested in accordance with CAN/ULC S102 per NBC Division B Subsection 3.1.12.

Table 7. Surface Burn Characteristics of Strong-R Structural Insulation

Product	Flame Spread Rating	Smoke Developed Classification
Strong-R Structural Insulation[1]	20	125
1. Foam plastic core tested in accordance with CAN/ULC S-102, with maximum foam thickness of 102 mm (4").		

5.7 *Thermal Barrier*

5.7.1 Installation shall be fully protected from the interior of the building by an approved thermal barrier as required by NBC Division B Article 3.1.5.15.

5.8 *Non-Structural Applications*

5.8.1 Where other means of wall bracing are provided, or are not required, and an approved exterior wall covering capable of separately resisting loads perpendicular to the face of the walls is installed over the sheathing, Strong-R Structural Insulation may be installed in accordance with Section **6.3.6**.

5.9 Where the application falls outside of the performance evaluation, conditions of use and/or installation requirements set forth herein, alternative techniques shall be permitted in accordance with accepted engineering practice and experience. This includes but is not limited to the following areas of engineering: mechanics or materials, structural, building science, and fire science.

6 Installation

6.1 Installation shall comply with the manufacturer installation instructions, this report, the approved construction documents and the applicable building code.

6.2 In the event of a conflict between the manufacturer installation instructions this report and the applicable building code, the more restrictive shall govern.

6.3 *Installation Procedure*

6.3.1 *Orientation*

6.3.1.1 Strong-R Structural Insulation may be installed vertically or horizontally over studs, with framing not less than 20-gauge 50 ksi 92 mm ($3^5/_8$") and spaced a maximum of 610 mm (24") o.c.

6.3.1.2 Sheathing joints must be butted at framing members, and all panel edges shall be blocked. A single row of fasteners must be applied to each panel edge into the stud or blocking below. Do not tack product to framing, but fasten each panel completely after fastening begins.

6.3.2 *Attachment*

6.3.2.1 *Strong-R Structural Insulation:*

6.3.2.1.1 Minimum #8 x 41 mm ($1^5/_8$") self-drilling modified truss head screw or 2.5 mm (0.100") diameter x 38 mm ($1^1/_2$") length pins (Bostitch® C4S100 BG).

6.3.2.1.2 Fastener spacing shall be a maximum of 76 mm (3") o.c. along the edge and 76 mm (3") o.c. in the field or as required in Section **5** for the application selected.

6.3.3 *Gypsum Wallboard*

6.3.3.1 Where required, gypsum wallboard shall be a minimum 12.7 mm ($^1/_2$") thickness and shall be attached as follows:

6.3.3.1.1 #6 x 32 mm ($1^1/_4$") Type S screws.

6.3.3.1.2 Fastener spacing shall be as shown in Section **5**.

Confidential Intellectual Property is protected by Defend Trade Secrets Act 2016,
© 2024 DrJ Engineering, LLC

6.3.4 *Treatment of Joints*

6.3.4.1 Strong-R Structural Insulation sheathing joints must be butted at framing members, and a single row of fasteners must be applied to each panel edge into the stud below.

6.3.5 *Window Treatments*

6.3.5.1 Strong-R Structural Insulation must be installed with appropriate flashing and counter flashing in conformance with accepted building standards and in compliance with local building codes and the flashing manufacturer installation instructions.

6.3.6 *Non-Structural Applications*

6.3.6.1 Install panels with minimum #8 x 41 mm ($1^5/_8$") self-drilling modified truss head screw or 2.5 mm (0.100") diameter x 38 mm ($1^1/_2$") length pins (Bostitch® C4S100 BG).

6.3.7 The fastener spacing shall be 76 mm (12") o.c. along the top, bottom, and vertical panel edges and 76 mm (12") o.c. in the field. Do not tack product to framing, but fasten each panel completely after fastening begins.

7 Substantiating Data

7.1 Testing has been performed under the supervision of a professional engineer and/or under the requirements of ISO/IEC 17025 as follows:

7.1.1 Lateral load testing and data in accordance with ASTM E564 and E2126

7.1.2 Transverse load testing in accordance with ASTM E330

7.1.3 Test reports and data for determining use as a WRB material, in accordance with ASTM E331

7.1.4 Test reports and data for determining use as a component of an air barrier, in accordance with ASTM E2178

7.1.5 Test reports and data for determining surface burning characteristic in accordance with CAN/ULC S102

7.1.6 Test reports and data for determining comparative equivalency for use as an alternative material in accordance with NBC Division A Section 1.2

7.2 Manufacturer installation recommendations for structural sheathing on exterior walls.

7.3 Quality Control Manual in accordance with a third-party quality control program with inspections conducted by an approved agency.

7.4 Information contained herein is the result of testing and/or data analysis by sources that conform to the evaluation requirements of NBC Volume 1 Relationship of the NBC to Standards Development and Conformity Assessment and/or professional engineering regulations. DrJ relies upon accurate data to perform its ISO/IEC 17065 evaluations.

7.5 Where appropriate, DrJ's analysis is based on provisions that have been codified into law through provincial, territorial, or local adoption of codes and standards. The developers of these codes and standards are responsible for the reliability of published content. DrJ analysis may use code-adopted provisions as a control sample. A control sample versus a test sample establishes an innovative product as being equivalent to that prescribed in this code in quality, strength, effectiveness, fire resistance, durability, and safety.

7.6 The accuracy of the provisions provided herein may be reliant upon the published properties of raw materials, which are defined by the grade mark, grade stamp, mill certificate, Listings, certified reports, duly authenticated reports from approved agencies, and research reports prepared by approved agencies and/or approved sources provided by the suppliers of products, materials, designs, assemblies, and/or methods of construction. These are presumed to be minimum properties and relied upon to be accurate. The reliability of DrJ's engineering practice, as contained in this report, may be dependent upon published design properties by others.

Confidential Intellectual Property is protected by Defend Trade Secrets Act 2016,
© 2024 DrJ Engineering, LLC

7.7 Testing and engineering analysis: The strength, rigidity, and/or general performance of component parts and/or the integrated structure are determined by suitable tests that simulate the actual conditions of application that occur and/or by accepted engineering practice and experience.

7.8 Where additional condition of use and/or code compliance information is required, please search for Strong-R Structural Insulation on the DrJ Certification website.

8 Findings

8.1 As delineated in Section **3**, Strong-R Structural Insulation has performance characteristics that were tested and/or meet pertinent standards and is suitable for use pursuant to its specified purpose.

8.2 When used and installed in accordance with this report and the manufacturer installation instructions, Strong-R Structural Insulation shall be approved for the following applications:

8.2.1 Lateral load resistance due to wind and seismic loads carried by shear walls

8.2.2 Transverse load resistance due to components and cladding pressures on building surfaces

8.2.3 Performance of the foamed plastic component for conformance to NBC Division B Article 3.1.5.15

8.2.4 Performance for use as foamed plastic insulating sheathing in accordance with NBC Division B Article 3.1.5.15

8.2.5 Performance for use as a WRB in accordance with NBC Division B Article 5.6.2.1

8.2.6 Performance for use as an air barrier in accordance with NBC Division B Section 5.4, and NECC Division B Subsection 3.2.4

8.3 Any application-specific issues not addressed herein can be engineered by an RDP. Assistance with engineering is available from OX Engineered Products, LLC.

8.4 This innovative product has been evaluated in the context of the codes listed in Section **2** and is compliant with all known provincial, territorial, and local building codes. Where there are known variations in provincial, territorial, or local codes applicable to this report, they are listed here.

8.4.1 No known variations

8.5 NBC Volume 1 Relationship of the NBC to Standards Development and Conformity Assessment:

> **Certification**
> Certification is the confirmation by an independent organization that a product, service, or system meets a requirement…Certification bodies publish lists of certified products and companies…Several organizations, including the Canadian Construction Materials Centre (CCMC), offer such evaluation services.
>
> **Evaluation**
> An evaluation is a written opinion by an independent professional organization that a product will perform its intended function. An evaluation is very often done to determine the ability of an innovative product, for which no standards exist, to satisfy the intent of the Code requirement...

Confidential Intellectual Property is protected by Defend Trade Secrets Act 2016,
© 2024 DrJ Engineering, LLC

8.6 ISO/IEC 17065 accredited third-party certification bodies,[6] including but not limited to, Standards Council of Canada (SCC)[7] and ANSI National Accreditation Board (ANAB),[8] confirm that product certification bodies have the expertise to provide technical evaluation services within their scope of accreditation. All SCC and ANAB product certification bodies meet NBC requirements to offer evaluation services for alternative solutions.[9]

8.6.1 DrJ is an ISO/IEC 17065 ANAB-Accredited Product Certification Body – Accreditation #1131[10] and employs professional engineers.[11]

8.7 Through ANAB accreditation and the IAF Multilateral Agreements, this report can be used to obtain innovative product approval in any jurisdiction or country that has IAF MLA Members & Signatories to meet the Purpose of the MLA – "*certified once, accepted everywhere*." IAF specifically says, "*Once an accreditation body is a signatory of the IAF MLA, it is required to recognise certificates and validation and verification statements issued by conformity assessment bodies accredited by all other signatories of the IAF MLA, with the appropriate scope*."[12]

8.8 Product certification organizations, accredited by the SCC and ANAB, are defined as equivalent evaluation services:

8.8.1 Canada-United States-Mexico Agreement (CUSMA), Article 11.6 Conformity Assessment confirms mutual recognition by stating, "*...each Party shall accord to conformity assessment bodies located in the territory of another Party treatment no less favorable than that it accords to conformity assessment bodies located in its own territory or in the territory of the other Party*."

8.8.2 The SCC National Conformity Assessment Principles states, "*SCC is a member of a number of international organizations developing voluntary conformity assessment agreements that help ensure the international acceptance of Canadian conformity assessment results. Signatories to these agreements (like SCC) recognize each other's accreditations as being equivalent to their own*."[13]

8.9 Building official approval of a licensed professional engineer is performed by verifying the professional engineer and/or their business entity are listed by the engineering regulators of the relevant jurisdiction.

9 Conditions of Use

9.1 Material properties shall not fall outside the boundaries defined in Section **3**.

9.2 As defined in Section **3**, where material and/or engineering mechanics properties are created for load resisting design purposes, the resistance to the applied load shall not exceed the ability of the defined properties to resist those loads using the principles of accepted engineering practice.

9.3 As listed herein, Strong-R Structural Insulation shall not be used:

9.3.1 To resist horizontal loads from concrete and masonry walls.

9.3.2 As a nailing base.

9.4 This product shall be fully protected from the interior of the building by an approved thermal barrier.

---

6 https://anabpd.ansi.org/Accreditation/product-certification/DirectoryListingAccredited?menuID=1&prgID=1

7 https://iaf.nu/en/member-details/?member_id=91

8 https://iaf.nu/en/member-details/?member_id=14

9 NBC Division A Clause A-1.2.1.1.(1)(b) provides information on code compliance via alternative solutions and defines alternative solutions as "...achiev[ing] at least the minimum level of performance required by Division B." NBC Division C Section 2.3 includes additional guidance for documentation of alternative solutions.

10 https://anabpd.ansi.org/Accreditation/product-certification/AllDirectoryDetails?&prgID=1&OrgId=2125&statusID=4

11 Through ANAB accreditation and the IAF MLA, DrJ certification can be used to obtain material, product, design, or method of construction approval in any jurisdiction or country that has IAF MLA Members & Signatories to meet the Purpose of the MLA – "*certified once, accepted everywhere*."

12 https://iaf.nu/en/about-iaf-mla/#:~:text=required%20to%20recognise

13 The National Conformity Assessment Principles states, "*Product regulations and standards may vary from country to country. If these are set arbitrarily, they could be deemed as protectionist. The World Trade Organization (WTO) Agreement on Technical Barriers to Trade (TBT Agreement) is intended to ensure that technical regulations, standards and conformity assessment procedures of member countries do not create unnecessary obstacles to trade. Under the TBT Agreement, members of the WTO agree to use international standards, including conformity assessment standards and guides, as a basis for their technical requirements*."

Confidential Intellectual Property is protected by Defend Trade Secrets Act 2016,
© 2024 DrJ Engineering, LLC

9.5 In areas where termites are known to occur and foundations are insulated or otherwise finished in a manner that could conceal a termite infestation, in accordance with NBC Division B Article 9.3.2.9, a metal or plastic barrier shall be installed through the insulation to control the passage of termites behind or through the insulation.

9.6 Allowable shear loads shall not exceed values in **Table 1** and **Table 4** for wind loads, and **Table 2** and **Table 5** for seismic loads.

9.7 Transverse design loads shall not exceed those described in **Table 3**, unless an approved exterior wall covering capable of separately resisting loads perpendicular to the face of the walls is installed over the sheathing.

9.8 Strong-R Structural Insulation is manufactured under a quality control inspections established by the governing legislation of the adopting province or territory, as described in the NBC Volume 1 commentary on Conformity Assessment.

9.9 When installed as a wall sheathing but not installed per structural requirements, light-framed walls shall be braced by other means.

9.10 When used as a WRB, installation shall be in accordance with Section **5.3**.

9.11 Where required by regulation and enforced by the building official, also known as the authority having jurisdiction (AHJ) in which the project is to be constructed:

9.11.1 Any calculations incorporated into the construction documents shall conform to accepted engineering practice, and, when prepared by an approved source, shall be approved when signed and sealed.

9.11.2 This report and the installation instructions shall be submitted at the time of permit application.

9.11.3 This innovative product has an internal quality control program and a third-party quality assurance program.

9.11.4 At a minimum, this innovative product shall be installed per Section **6** of this TER.

9.11.5 This report shall be reviewed for code compliance by the AHJ in concert with the duties and powers granted to the building official by the provincial regulations governing such duties and powers.

9.11.6 The application of this innovative product in the context of this report, is dependent on the accuracy of the construction documents, implementation of installation instructions, inspections, and any other regulatory requirements that may apply.

9.12 Design loads shall be determined in accordance with the building code adopted by the jurisdiction in which the project is to be constructed and/or by the designer (e.g., owner).

9.13 The actual design, suitability, and use of this report, for any particular building, is the responsibility of the owner or the authorized agent of the owner.

10 Identification

10.1 The innovative product listed in Section **1.1** is identified by a label on the board or packaging material bearing the manufacturer name, product name, TER number, and other information to confirm code compliance.

10.2 Additional technical information can be found at www.oxengineeredproducts.com.

11 Review Schedule

11.1 This report is subject to periodic review and revision. For the most recent version, visit drjcertification.org.

11.2 For information on the status of this report, contact DrJ Certification.

Confidential Intellectual Property is protected by Defend Trade Secrets Act 2016,
© 2024 DrJ Engineering, LLC

12 Legislation that Authorizes New Product Approval in International Markets is Found in Appendix A

12.1 Strong-R Structural Insulation has been tested by an ISO/IEC 17025 accredited laboratory and/or evaluated to be in conformance with accepted engineering practice to ensure durable, livable, and safe construction.

12.2 This report is published by an ISO/IEC 17065 accredited certification body with the expertise to evaluate products, materials, designs, services, assemblies, and/or methods of construction.

12.3 This report meets the legislative intent and definition of a duly authenticated report, which shall be accepted by the AHJ, unless there are specific reasons why the alternative shall not be approved as provided for in writing.

Confidential Intellectual Property is protected by Defend Trade Secrets Act 2016,
© 2024 DrJ Engineering, LLC

Appendix A

1 Legislation that Authorizes New Product Approval in Canada

1.1 The Competition Act is a Canadian federal law governing competition law in Canada. The Act contains both criminal and civil provisions aimed at preventing anti-competitive practices in the marketplace. The Act is enforced and administered by the Competition Bureau, whose regulations encourage the approval of NBC referenced and alternative products, materials, designs, services, assemblies and/or methods of construction that:

1.1.1 Advance Innovation,

1.1.2 Promote competition so all businesses have the opportunity to compete on price and quality in an open market on a level playing field unhampered by anticompetitive constraints, and

1.1.3 Benefit consumers through lower prices, better quality, and greater choice.

1.2 **Approved by International Jurisdictions**: The USMCA and GATT agreements provide for approval of innovative materials, products, designs, services, assemblies and/or methods of construction through the Technical Barriers to Trade (TBT) agreements and the International Accreditation Forum (IAF) Multilateral Recognition Arrangement (MLA), where these agreements proclaim the desire of both countries to have their markets open to innovation.

1.3 These agreements:

1.3.1 Permit participation of conformity assessment bodies located in the territories of other Members (defined as GATT Countries) under conditions no less favourable than those accorded to bodies located within their territory or the territory of any other country,

1.3.2 State that conformity assessment procedures (i.e., ISO/IEC 17020, 17025, 17065, etc.) are prepared, adopted, and applied so as to grant access for suppliers of like products originating in the territories of other Members under conditions no less favourable than those accorded to suppliers of like products of national origin or originating in any other country, in a comparable situation.

1.3.3 State that conformity assessment procedures are not prepared, adopted, or applied with a view to or with the effect of creating unnecessary obstacles to international trade. This means that conformity assessment procedures shall not be more strict or be applied more strictly than is necessary to give the importing Member adequate confidence that products conform to the applicable technical regulations or standards.

1.4 To this end, Canada operates an accreditation system as follows:

Confidential Intellectual Property is protected by Defend Trade Secrets Act 2016,
© 2024 DrJ Engineering, LLC

1.5 This includes ISO/IEC 17065 product certification as follows:

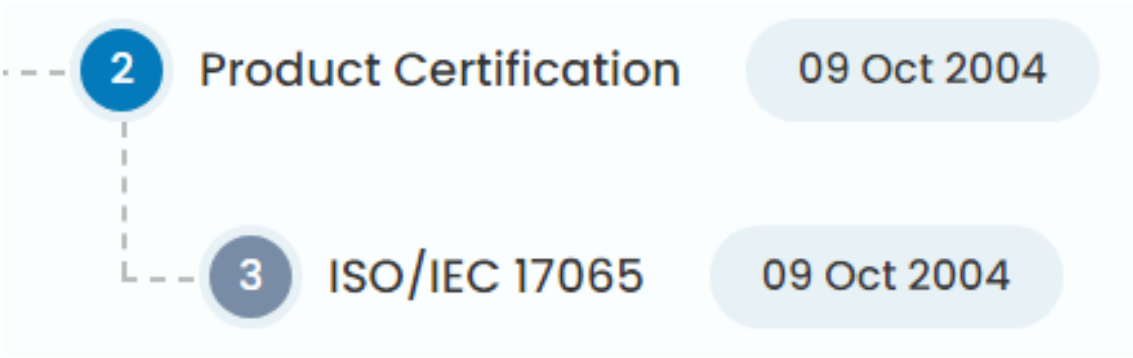

1.6 Similarly, the United States operates multiple accreditation process with ANAB being the most prominent ISO/IEC 17065 product certification organization as follows:

1.7 This includes ISO/IEC 17065 product certification as follows:

Confidential Intellectual Property is protected by Defend Trade Secrets Act 2016,
© 2024 DrJ Engineering, LLC

1.8 The list of ANAB accredited ISO/IEC 17065 product certification organizations can be found at the following link: https://anabpd.ansi.org/Accreditation/product-certification/DirectoryListingAccredited?menuID=1&prgID=1

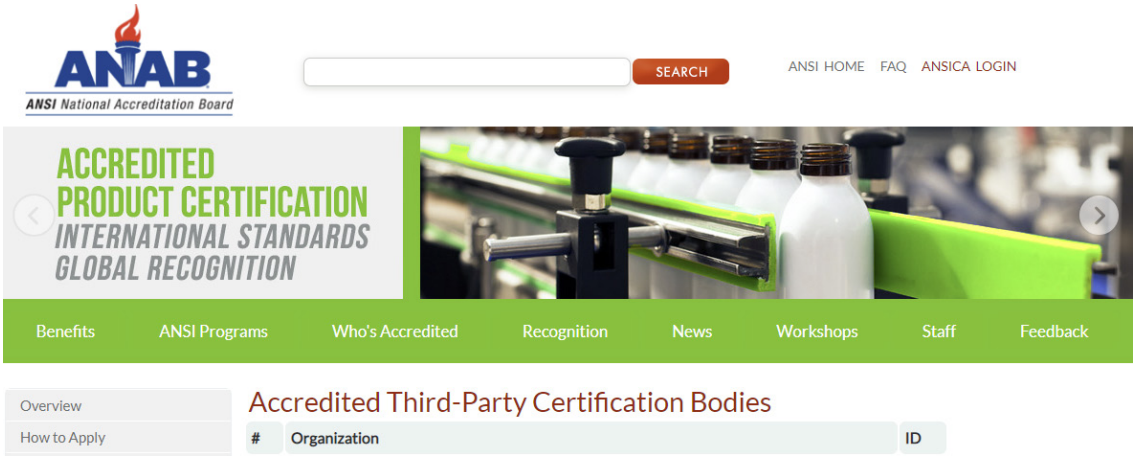

1.9 Approval is granted via International Agreement, where the purpose of the IAF MLA is to ensure mutual recognition of accredited certification and validation/verification statements between signatories. Subsequent acceptance of accredited certification and validation/verification statements is required so that one accreditation can be used for the timely approval of innovative materials, products, designs, services, assemblies and/or methods of construction. Accreditations granted by IAF MLA signatories are recognised worldwide based on their equivalent accreditation programs, therefore reducing costs and adding value to businesses and consumers.

1.10 Consequently, these agreements permit product approval of innovative Australian and New Zealand products into US markets and vice-versa.

1.11 Finally, a question that often arises is, why do these agreements exist? In addition, another question is why is the ISO/IEC 17065 accredited third-party certification process so important?

1.11.1 The answer is because all countries desire to protect the intellectual property and trade secrets of their country's businesses.

1.11.2 In the US this protection is provided by 18 U.S. Code § 1831 Under Economic Espionage, where it states "whoever, intending or knowing that the offense will benefit any foreign government, foreign instrumentality, or foreign agent, knowingly steals, or without authorization appropriates, takes, carries away, or conceals, or by fraud, artifice, or deception obtains a trade secret shall be fined not more than $5,000,000 or imprisoned not more than 15 years, or both."

1.11.3 Any organization that commits any offense described shall be fined not more than the greater of $10,000,000 or three (3) times the value of the stolen trade secret to the organization, including expenses for research and design and other costs of reproducing the trade secret that the organization has thereby avoided.[14]

1.11.4 Protection of intellectual property and trade secrets reinforces the value of the IAF MLA, the GATT/TBT and the ISO/IEC 17065 product approval process.

1.11.5 The goal is to protect everyone's best interests while also facilitating economic freedom and opportunity by promoting free and fair competition in the marketplace.

[14] https://www.law.cornell.edu/uscode/text/18/part-I/chapter-90

Confidential Intellectual Property is protected by Defend Trade Secrets Act 2016,
© 2024 DrJ Engineering, LLC